# PHV Series Designer.

## Vertical Ambient Range

### Right hand installation

Thermoscreens

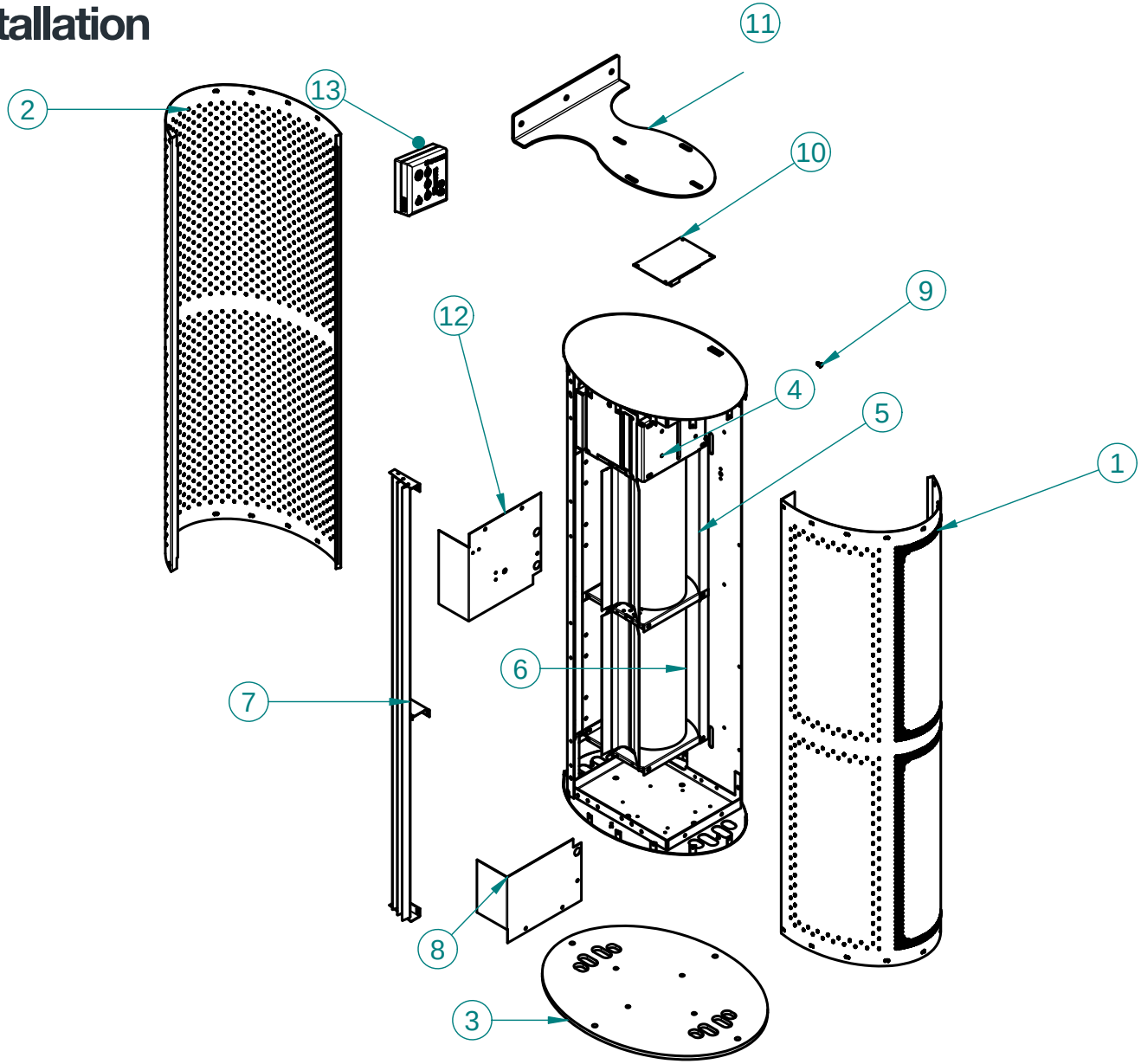

| Item No. | Description | PHV D1000A P/N. | PHV D1500 A P/N. | PHV D2000 A P/N. |
|---|---|---|---|---|
| 1 | INLET CASE | T5061510 | T5062510 | T5063510 |
| 2 | BACK CASE | T5061505 | T5062505 | T5063505 |
| 3 | BASE PLATE | T6811930 | T6811930 | T6811930 |
| 4 | MOTOR | T7551710 | T7551730 | T7551710 |
| 5 | MOTOR END IMPELLOR | T7421270 | T5441610 | T7421270 |
| 6 | DRIVEN END IMPELLOR | T7421271 | T5441620 | T7421271 |
| 7 | OUTLET GRILL | T5315010 | T5315030 | T5315050 |
| 8 | END COVER LOWER | T5072240 | T5072240 | T5072240 |
| 9 | CASE COVER FIXING SCREW | T7362042 | T7362042 | T7362042 |
| 10 | ECOPOWER BOARD | T7263701 | T7263701 | T7263701 |
| 11 | ADJUSTABLE TOP BRACKET OPTIONAL | T6811960 | T6811960 | T6811960 |
| 12 | END COVER UPPER | T5072230 | T5072230 | T5072230 |
| 13 | ECOPOWER REMOTE CONTROL | T7263630 | T7263630 | T7263630 |
| | | | | |
| | | | | |
| | | | | |
| | | | | |
| | | | | |
| | | | | |